Date: Thursday, 4/12/2007 9:34:07 AM
User: Kim Johnston

Process Sheet

Customer	: CU-DAR001 Dart Helicopters Services	**Drawing Name**	: 206 L WEB
Job Number	: 31789		
Estimate Number	: 10722		
P.O. Number	: N/A	**Part Number**	: D26547
This Issue	: 4/12/2007 S.O. No. : N/A	**Drawing Number**	: D2654 REV E1
Prsht Rev.	: NC	**Project Number**	: N/A
First Issue	: N/A Type : LANDING GEAR	**Drawing Revision**	: E1
Previous Run	: 30726	**Material**	: N/A
Written By	:	**Due Date**	: 4/30/2007 Qty: ~~4~~ 8 Um: Each
Checked & Approved By	: 07.04.12		
Comment	: Est Rev:D 99.02.04 Fixed typo, Changed procedure DM		
	Est Rev:e 06.04.05 Added level21 EC		

Additional Product

Job Number:

Seq. #:	Machine Or Operation:	Description :
1.0	D26007125	Extrusion 'I Beam' thick

Comment: Qty.: 1.0000 Each(s)/Unit Total : 4.0000 Each(s)

Pick:

Qty	Part Number	Description	Batch
1	D2600-7- 125	Web	B21130

JD 7-4-18

2.0	LANDING GEAR 1	LANDING GEAR RESOURCE 1

Comment: LANDING GEAR RESOURCE 1

1-Cut D2600-7 to length as per Dwg D2654

2-Drill pilot holes in web using drill jig DT 8018-7 as perDwg D2654

3-Using the uni-bit, open holes to finish size as per Dwg D2654

4-Deburr holes and ends

JD 7-4-18

3.0	QC5	INSPECT WORK TO CURRENT STEP

Pmc/DP 7-4-18

Comment: INSPECT WORK TO CURRENT STEP

4.0	HAND FINISHING1	HAND FINISHING RESOURCE #1

Comment: HAND FINISHING RESOURCE #1
Chemical Conversion Coat as per QSI 005 4.1

JD 7-4-19

Dart Aerospace Ltd

W/O:		WORK ORDER CHANGES						
DATE	STEP	PROCEDURE CHANGE		By	Date	Qty	Approval Chief Eng / Prod Mgr	Approval QC Inspector

Part No: _____ **PAR #:** _____ **Fault Category:** _____ **NCR:** Yes (No) **DQA:** [illegible] **Date:** 07/04/23

QA: N/C Closed: _____ **Date:** _____

NCR:		WORK ORDER NON-CONFORMANCE (NCR)							
DATE	STEP	Description of NC Section A	Corrective Action Section B				Verification Section C	Approval Chief Eng	Approval QC Inspector
			Initial Chief Eng	Action Description Chief Eng		Sign & Date			

NOTE: Date & initial all entries

Date: Thursday, 4/12/2007 9:34:07 AM
User: Kim Johnston

Process Sheet

Customer: CU-DAR001 Dart Helicopters Services **Drawing Name:** 206 L WEB

Job Number: 31789 **Part Number:** D26547

Job Number:

Seq. #:	Machine Or Operation:	Description :
5.0	QC3	INSPECT POWDER COAT/CHEMICAL CONVERSION
	Comment: INSPECT POWDER COAT/CHEMICAL CONVERSION	
6.0	PACKAGING 1	PACKAGING RESOURCE #1
	Comment: PACKAGING RESOURCE #1 Identify and Stock Location: LG	
7.0	QC21	FINAL INSPECTION/W/O RELEASE
	Comment: FINAL INSPECTION/W/O RELEASE	

Pw 07-04-20 (8)

Pw 07-04-20 (8)

(8) 07/04/23

Job Completion

07/04/23

Form: rprocess

Dart Aerospace Ltd

W/O:		WORK ORDER CHANGES						
DATE	STEP	PROCEDURE CHANGE		By	Date	Qty	Approval Chief Eng / Prod Mgr	Approval QC Inspector

Part No: _____ **PAR #:** _____ **Fault Category:** _____ **NCR:** Yes No **DQA:** _____ **Date:** _____

QA: N/C Closed: _____ **Date:** _____

NCR:		WORK ORDER NON-CONFORMANCE (NCR)							
DATE	STEP	Description of NC Section A	Corrective Action Section B				Verification Section C	Approval Chief Eng	Approval QC Inspector
			Initial Chief Eng	Action Description Chief Eng		Sign & Date			

NOTE: Date & initial all entries

DART

COPY ISSUED

DESIGN	DRAWN BY	DART AEROSPACE USA, INC. PORT HADLOCK, WA
CHECKED	APPROVED	DRAWING NO. D2654 — REV. E — SHEET 1 OF 2
DATE 04.05.26		TITLE WEB — SCALE 1:20

A	97.03.25	NEW ISSUE
B	97.06.26	ALTER HOLE PATRN., 0.500 WAS 0.438
C	97.10.29	CHANGED HOLE PATTERN
D	98.01.15	GHW HOLES CHANGED TO ø0.63
E	04.05.26	CHANGE LENGTHS, REFORMAT
E1	04.08.04	PER TOOLING; 80.8 WAS 80.5

RELEASED 04.06.22

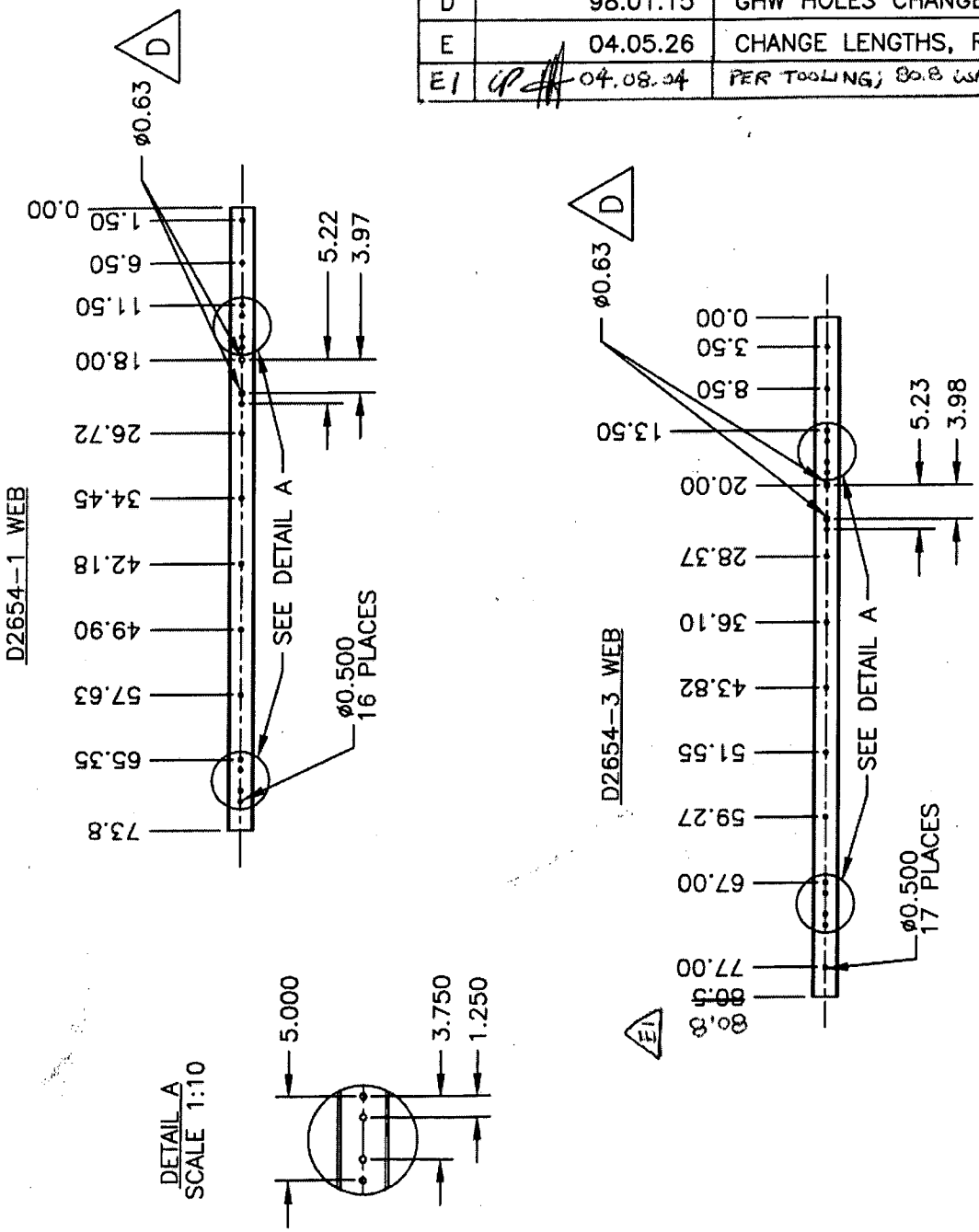

MAKE FROM D2600-5-108 EXTRUSION
FINISH: CHEMICAL CONVERSION COAT PER DART QSI 005 4.1
TOLERANCES ARE PER DART QSI 018 UNLESS OTHERWISE NOTED

SHOP COPY
RETURN TO
ENGINEERING
UNCONTROLLED COPY
SUBJECT TO AMENDMENT
WITHOUT NOTICE
WORK ORDER
NO. 31789

DESIGN	DRAWN BY	DART AEROSPACE USA, INC. PORT HADLOCK, WA	
CHECKED	APPROVED	DRAWING NO. D2654	REV. E SHEET 2 OF 2
DATE 04.05.26		TITLE WEB	SCALE 1:20

RELEASED 04.06.22

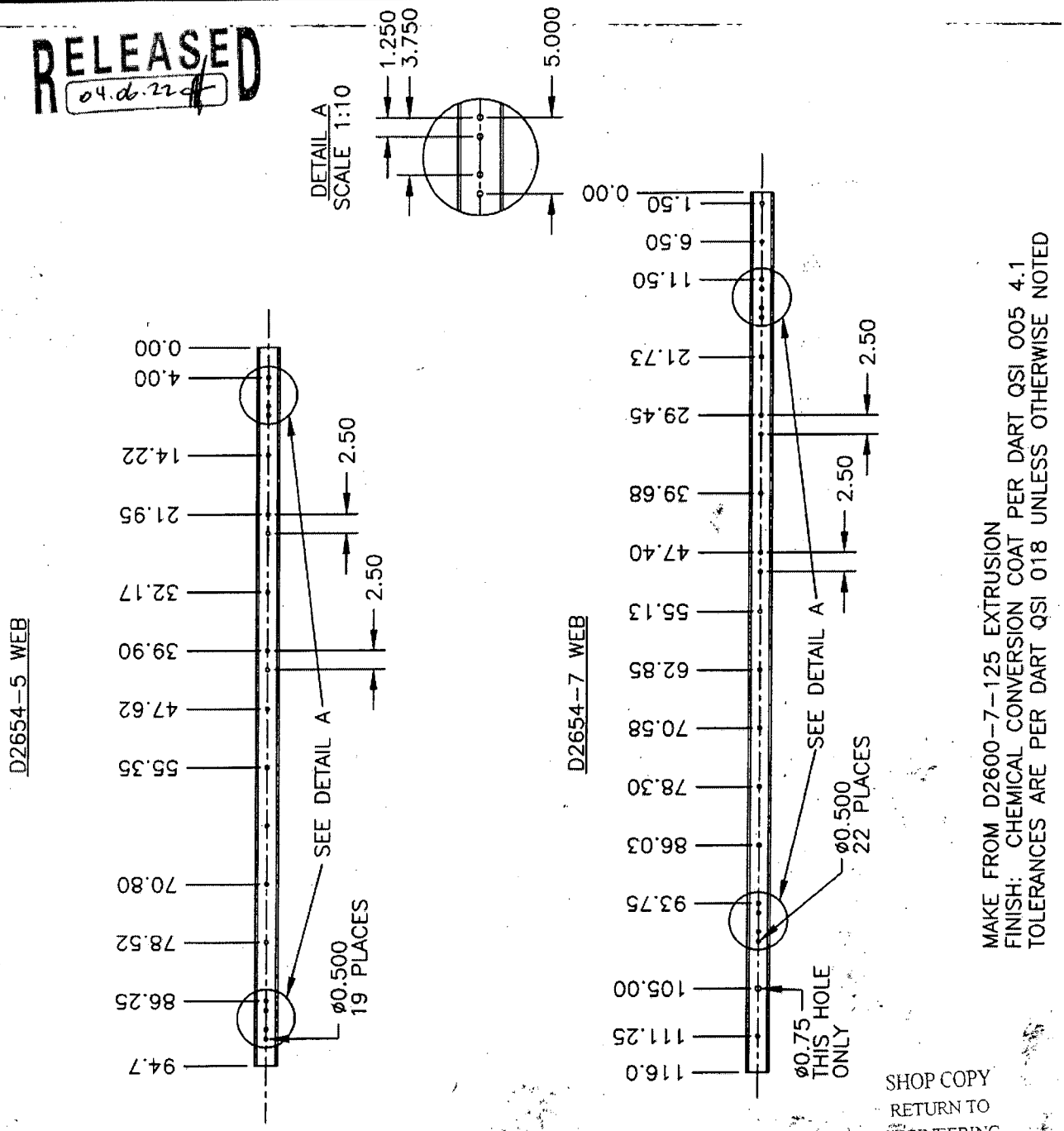

MAKE FROM D2600-7-125 EXTRUSION
FINISH: CHEMICAL CONVERSION COAT PER DART QSI 005 4.1
TOLERANCES ARE PER DART QSI 018 UNLESS OTHERWISE NOTED

SHOP COPY
RETURN TO
ENGINEERING
UNCONTROLLED COPY
SUBJECT TO AMENDMENT
WITHOUT NOTICE
WORK ORDER
NO 31789